SHEN ZHEN AV-DISPLAY CO.,LTD

SPECIFICATIONS FOR
LIQUID CRYSTAL DISPLAY MODULE

MODEL NO.: HY-1602F-801 DATE:AUG.22.2003

Approved	Checked	Department

CUSTOMER:

MODEL NO.: DATE:

Approved	Checked	Department

CONTENTS

Ⅰ.General Specifications

1. General

The AV-DISPLAY dot matrix LCD module consist of the liquid crystal display C-MOS driver and C-MOS LSI controller. the module utilizes 5*7 dot matrix characters to provide full alphanumeric capability. All control, refresh and display functions are executed by a dedicated on-board controller. the module is capable of displaying the full 160-character JIS font set .data interfacing is via the 4-bit or 8-bit bi-directional data bus by using of simple control commands the data can be selective written to the data register.

2. Features

A. Built-In Controller LSI.

B. 5*7 Dot Matrix With Cursor.

C. Micro-Processor Compatible Data-Bus Interface(4-Bit Or 8-Bit).

D. Character Generator ROM Built-In

5*8 Dot : ----------208 Character Fonts

5*10 Dot : ----------32 Character Fonts

E. Character Generator RAM--------Customer Rewritable

5*8 Font:8 Characters

F. Powerful Control Command

(1) Display Clear

(2) Return Home

(3) Cursor Preset

(4) Cursor On/Off Or Cursor Blinking

(5) Cursor Display Shift

(6) Display Shift

(7) Display On/Off Control

(8) Display Data Read/Write

G. Low power consumption 5.0v power supply

H. Attaching drawing and general description.

HY-1602F-801

16x2 CHARACTERS
1/16DUTY,1/5BIAS

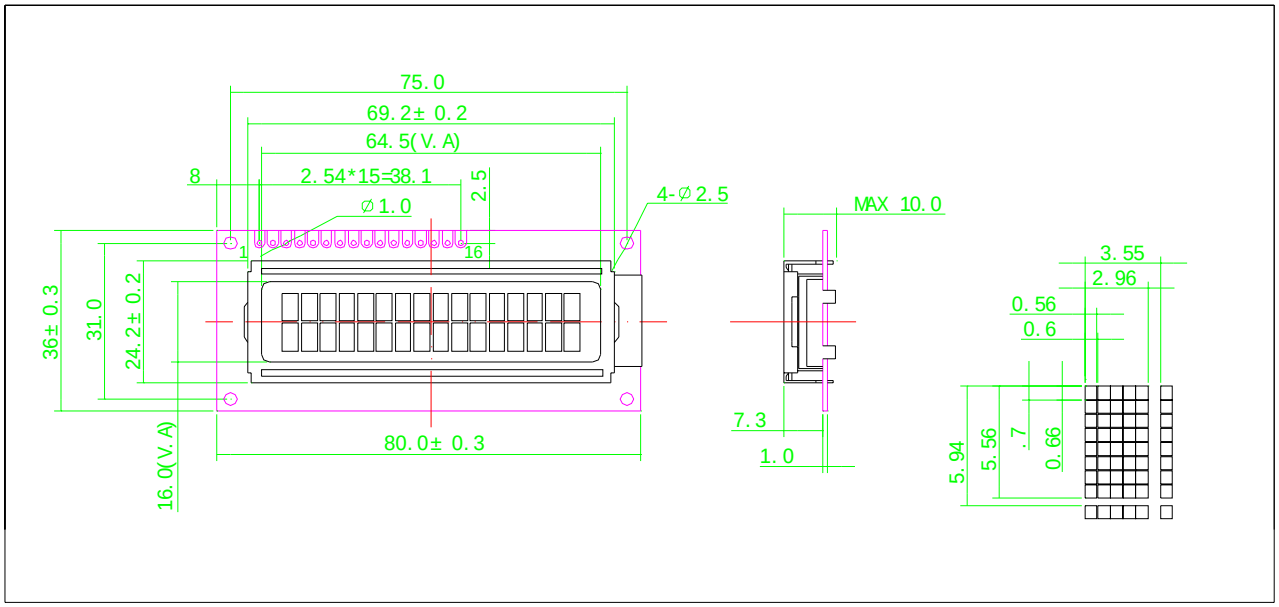

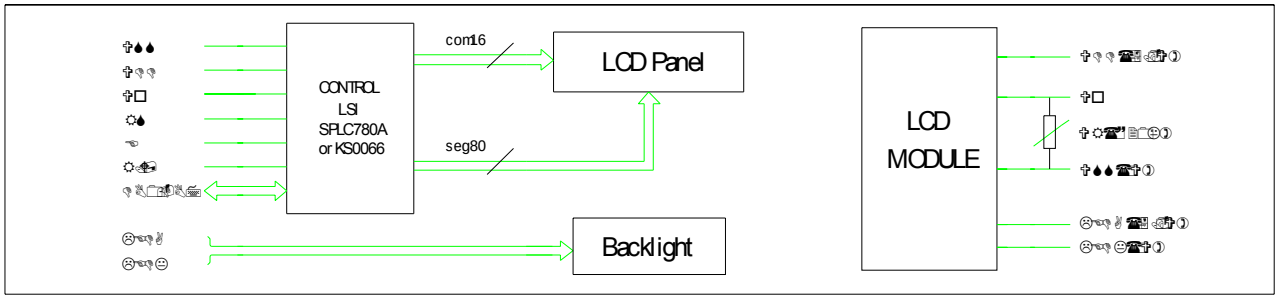

Item	Nominal Dimensions(mm)	FEATURE	
		LCD Type	STN
Module Size (W*H*T)	80.0x36.0x10.0	LCD Colour	BULE MODE
View Area (W*H)	64.5x16.0	View Angle	6 Oclock
Character Pitch(W*H)	3.55x5.95	Display Type	Negative Type
Character Size(WxH)	2.95x5.56	Rear polarizer	Transmissive
Character Font	5x8	Operating Temperature	-20℃ ~ 70℃
Dot Pitch (W*H)	0.60x0.70	Storage Temperature	-30℃ ~ 80℃
Dot Size (W*H)	0.56x0.66	Blacklight	LED (White)

Item	Symbol	Test Condition	Min.	Typ.	Max.	Unit
Operating Voltage	Vdd	Ta= 25℃	---	5.0		V
Operating Voltage for LCD	Vdd	Ta= 25℃	---	4.5	---	V
Supply Current	Idd	Ta= 25℃, Vdd= 5.0V	---	2.0	3.0	mA
Supply Current for Blacklight	If	Ta= 25℃, Vf= 4.2V	---	30	---	mA

Pin No	Symbol	Level	Description
1	VSS	--	GND
2	VDD	--	Power supply for Logic(+ 5.0)
3	Vo	--	Power supply for LCD
4	RS	H/L	Register selection (H:Data registor, L:Instruction registor)
5	R/W	H/L	Read/write selection (H:Read,L:Write)
6	E	H/H—L	Enable signal for chip
7-14	DB0-DB7	H/L	Data Bus line
15	LEDA	--	Power supply for Blacklight(+)
16	LEDK	--	Power supply for Blacklight(-)

4.Timing Characteristics:

Write Operation and Read Operation

Item	Symbol	Min.	Typ.	Max.	Unit
Enable Cycle Time	T_{CYCLE}	500	--	--	nS
Enable Pulse Width	P_{WEH}	220	--	--	nS
Enable Rise & Fall Time	T_{ER},T_{EF}	--	--	25	nS
Address Set-Up Time	T_{AS}	40	--	--	nS
Address Hold Time	T_{AH}	10	--	--	nS
Data Set-Up Time	T_{DSW}	60	--	--	nS
Data Hold Time	T_{H}	10	--	--	nS

Item	Symbol	Min.	Typ.	Max.	Unit
Enable Cycle Time	T_{CYCLE}	500	--	--	nS
Enable Pulse Width	P_{WEH}	220	--	--	nS
Enable Rise & Fall Time	T_{ER},T_{EF}	-	--	25	nS
Address Set-Up Time	T_{AS}	40	--	--	nS
Address Hold Time	T_{AH}	10	--	--	nS
Data Set-Up Time	T_{DSW}	-	--	120	nS
Data Hold Time	T_{H}	20	--	--	nS

5.Write Operation:

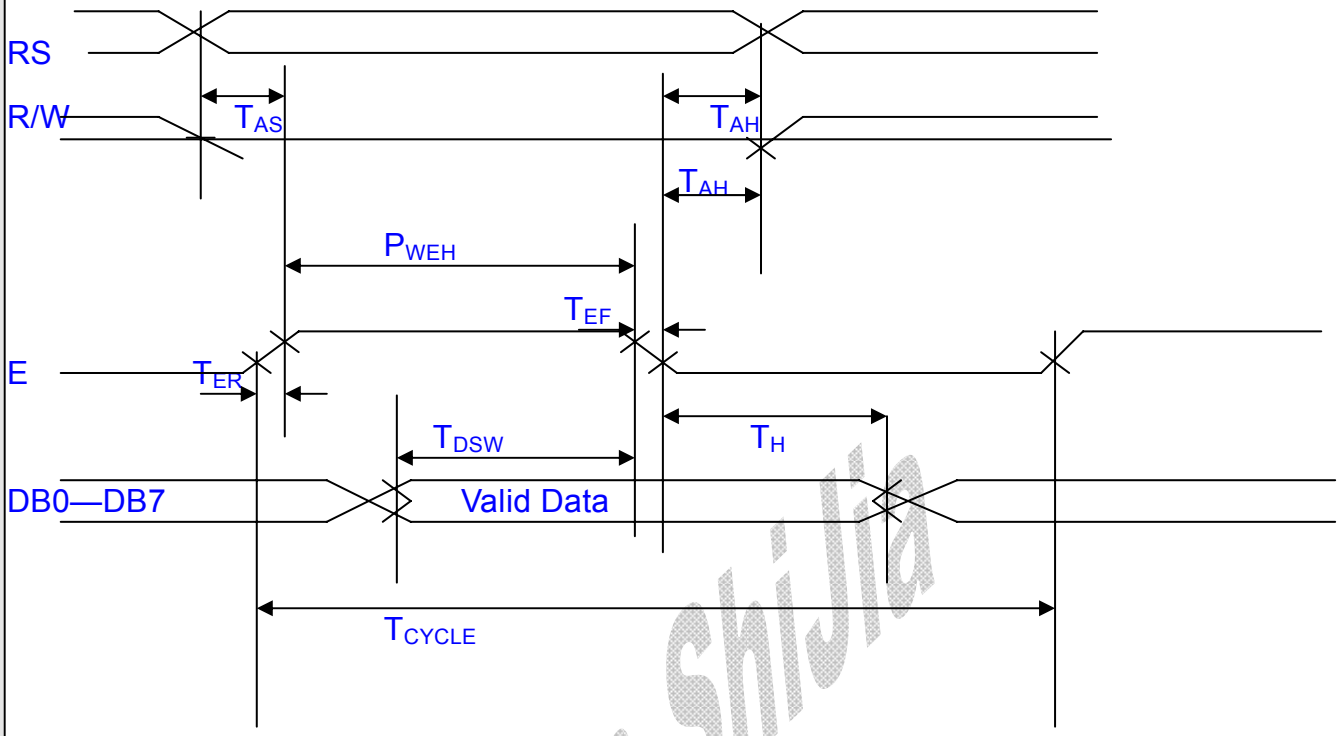

Read Operation

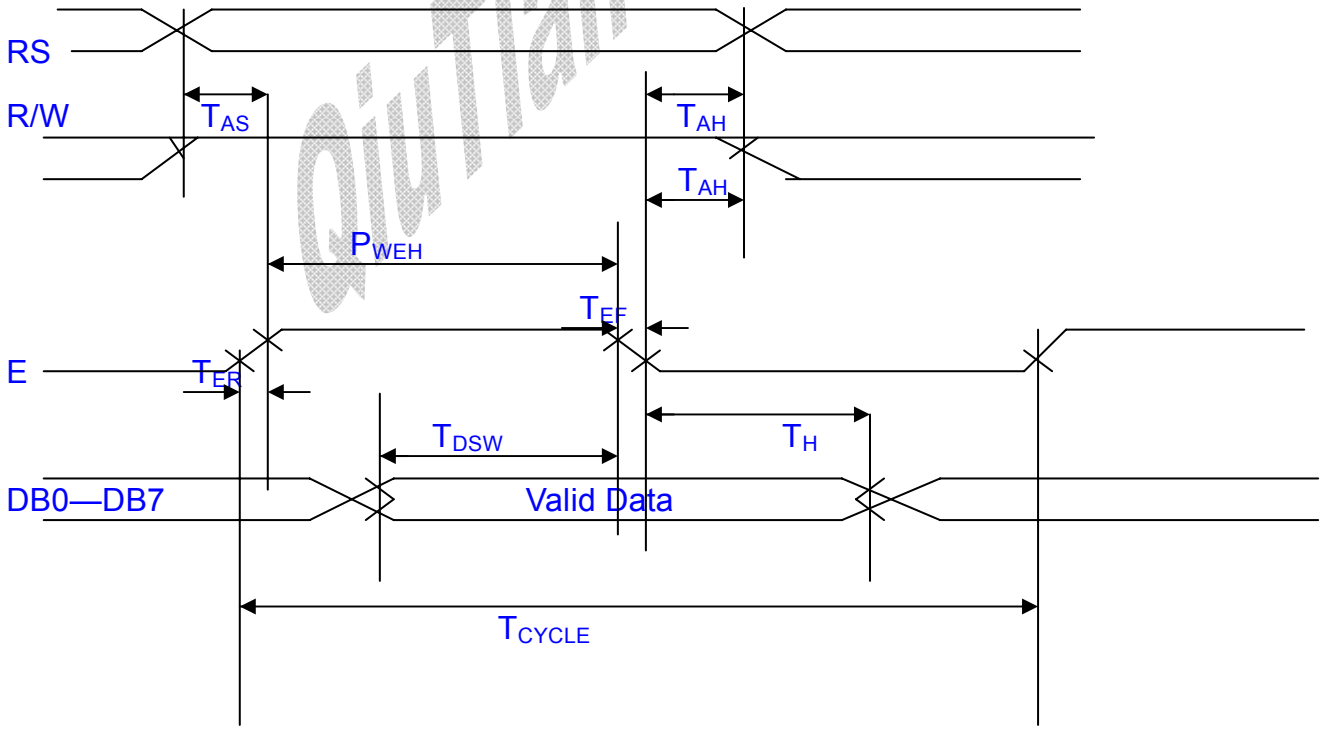

Ⅱ.The Characteristics and The Reliability Test

1.Electro-Optic Characteristics:

Condition:TEMP=(21±3)℃ HUM=(70±5)%RH

V_{DD}: 5.0V F_{OSC}: 270KHZ

NO	Item		Symbol	Min.	Typ.	Max.	Unit	Remarks
1	Operating Voltage		Vop		5.0		V	
2	Current Consumption		Is		1.30		mA	
3	Response Time		Ton		150		ms	
			Toff		120		ms	
4	Contrast		CR	3				
5	Viewing Angle (CR≥3.0)	12H	θ 1		15		Deg.	
		6H	θ 2		45			
		3H	θ 3		50			
		9H	θ 4		50			
6	Threshold Voltage		Vth		1.14		V	
7	Backlight Current Consumption		LED		30		mA	

2.Reliability Test

No	Items	Test Condition		Test Result
1	High Temp Storage	Temp:70±2℃ Time:96h Restore:24h		Passed
2	Low Temp Storage	Temp:-20±3℃ Time:96h Restore:24h		Passed
3	High Temp Static drive	Temp:50±2℃ Vop:5V Time:96h Restore:24h		Passed
4	Low Temp Static drive	Temp:0±3℃ Vop:5V Time:96h Restore:24h		Passed
5	High Temp High Hum Storage	Temp:40±2℃ Hum:95%Rh Time:96h Restore:24h		Passed
6	Thermal Shock	Temp:(℃) 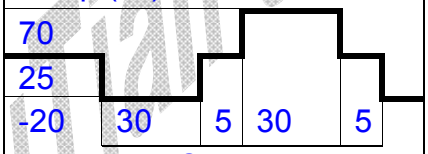 5 Cycles Restore:24h		Passed

Ⅲ.The LCD Measuring Method and Equipment

1. Current Consumption Measuring

(1) Equipment

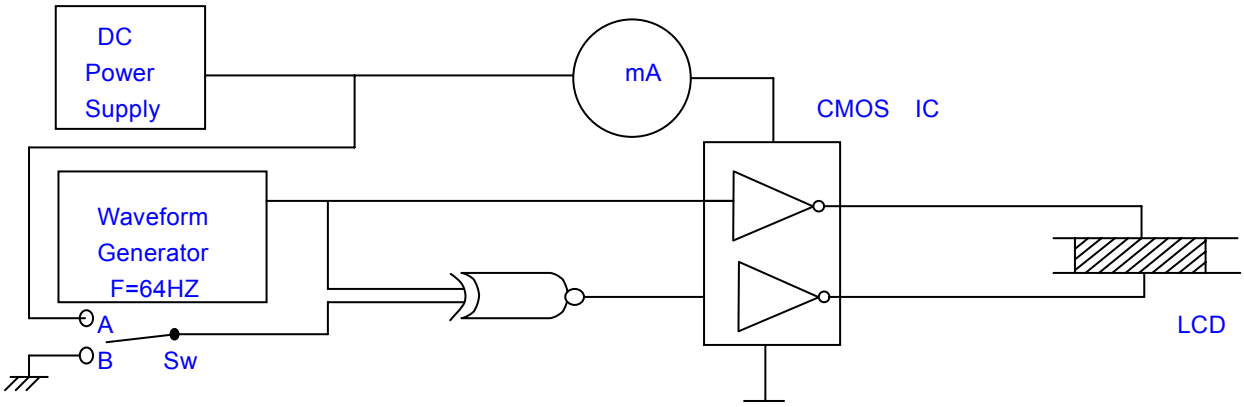

(2) Condition

Operating Frequency: 64HZ

Operating Voltage (RMS): Selected Voltage

2. Threshold Voltage and Response Time Measuring

(1) Equipment

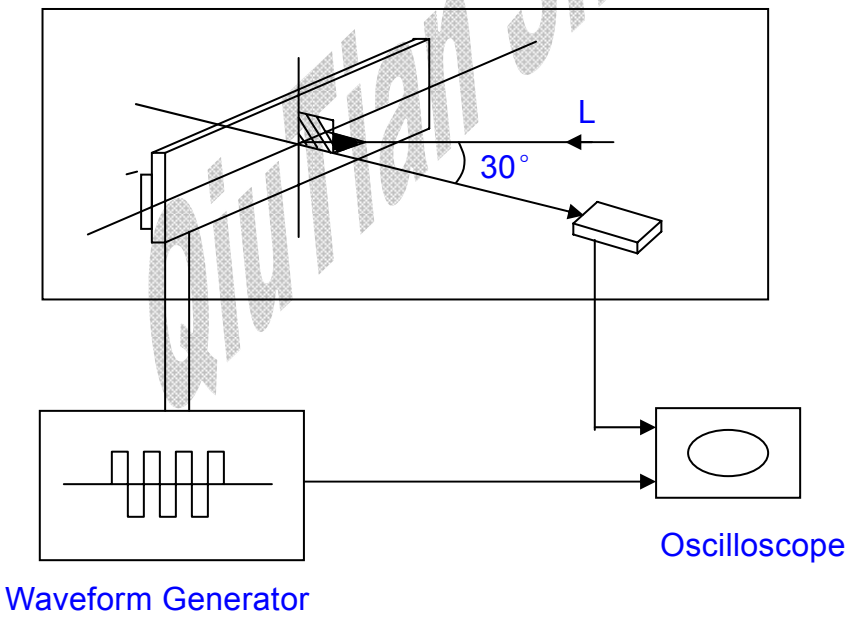

(2) Definition

A. Threshold Voltage (V_{th})

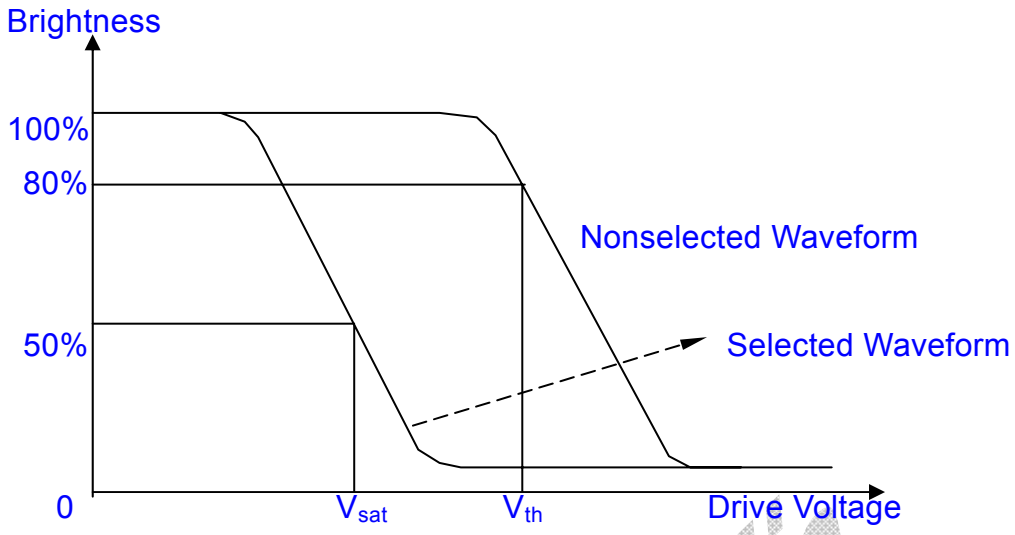

B. Response Time

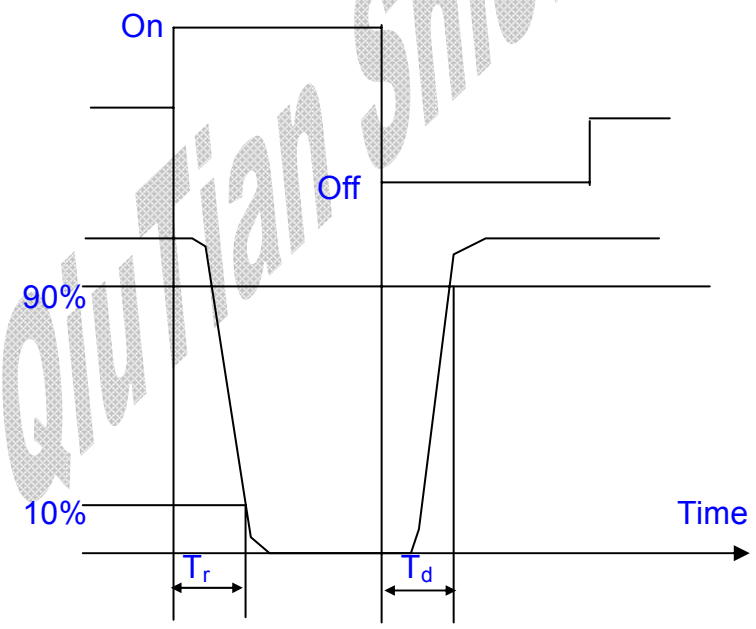

3. Contrast Measuring

(1) Equipment

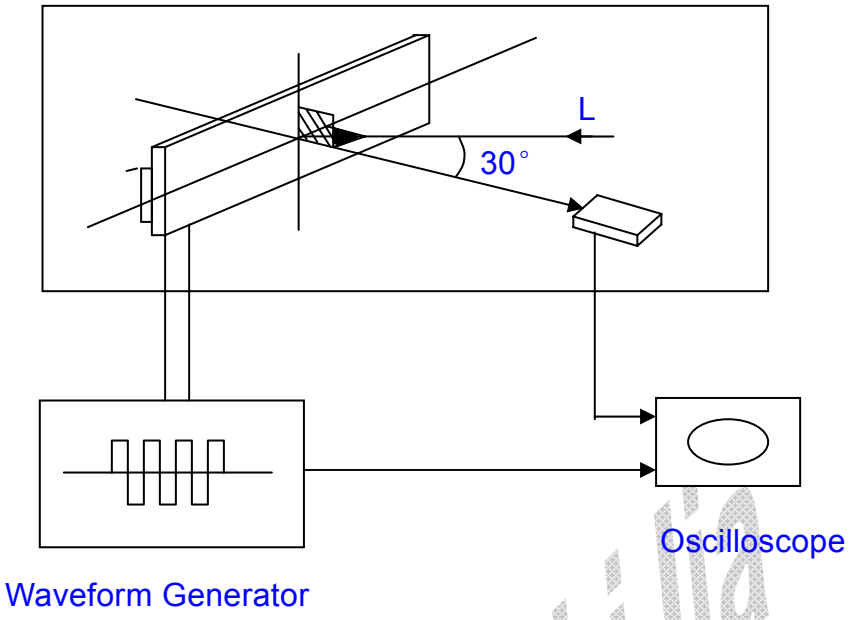

(2)Definition:

A.Viewing Angle:

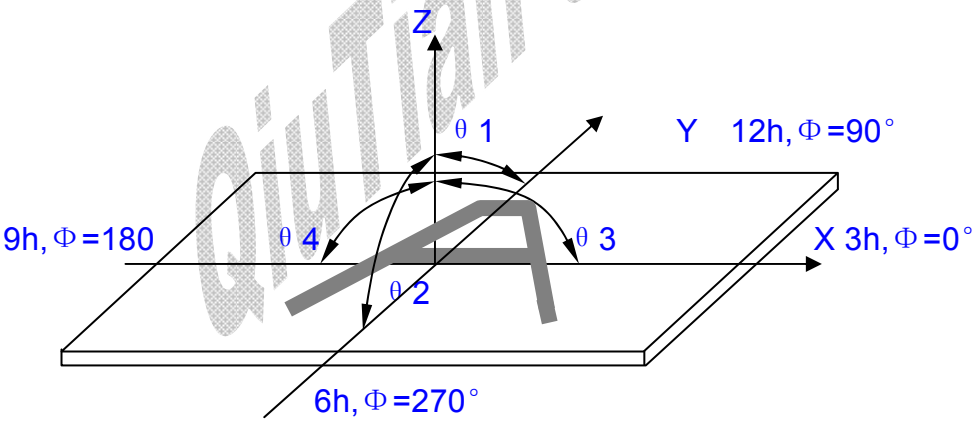

B. Contrast Ratio (Positive)

$$CR = \frac{\text{Brightness of non-selected wave-form}}{\text{Brightness of selected wave-form}}$$

Ⅳ.Standard Specifications for Product Quality

1. Manner of Test:：

1.1.The Test Must Be Under 40w Flourescent Light, And The Distance Of View Must Be At 30cm.

1.2.The Test Direction Is Based On Around 15°- 45° Of Vertical Line.

2. Definition Of Defects

2.1 Major Defects

A:Non-Display

B:Segment Missing

C:Over Current

D:Segment Short

E:Sealant Dishardexn

F:Wrong Polarizer Direction

2.2 Interface Circuit and Drive Programe on LCM of character series.

A. Interface circuit:

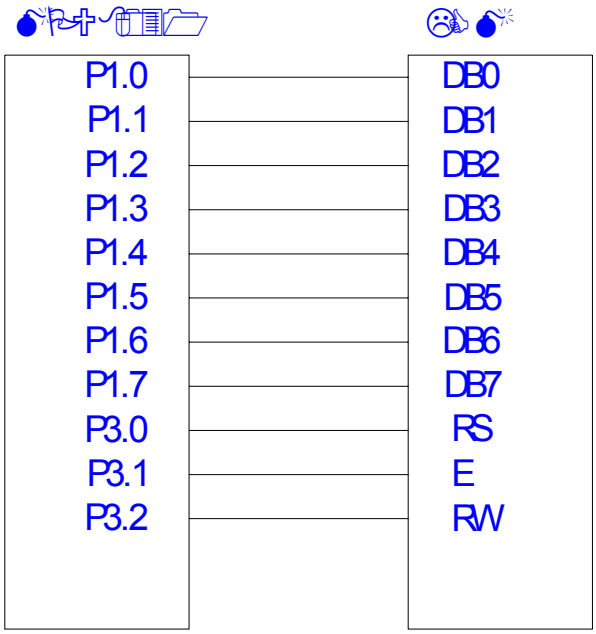

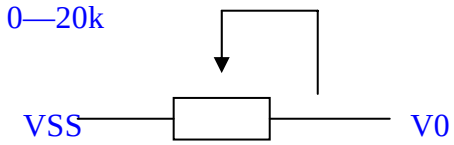

B.Drive programme for testing LCM of character series.

```
ORG     0000H
AJMP    MAIN

ORG     0300H
DB      58H,58H,58H,58H,58H,58H,58H,58H,
DB      58H,58H,58H,58H,58H,58H,58H,58H,
DB      58H,58H,58H,58H,58H,58H,58H,58H,
DB      58H,58H,58H,58H,58H,58H,58H,58H,
DB      58H,58H,58H,58H,58H,58H,58H,58H,
DB      58H,58H,58H,58H,58H,58H,58H,58H,
DB      58H,58H,58H,58H,58H,58H,58H,58H,
DB      58H,58H,58H,58H,58H,58H,58H,58H,
DB      58H,58H,58H,58H,58H,58H,58H,58H,
DB      58H,58H,58H,58H,58H,58H,58H,58H,
ORG     0350H
DB      2AH,59H,55H,53H,55H,4EH,47H,2AH,
DB      45H,4CH,45H,43H,2EH,4CH,54H,44H,
DB      2AH,44H,4FH,54H,2AH,4DH,41H,54H,
DB      52H,49H,58H,2AH,4CH,43H,44H,2AH,
DB      4BH,65H,5AH,6FH,6EH,48H,75H,69H,
DB      2AH,59H,55H,53H,55H,4EH,47H,2AH,
DB      45H,4CH,45H,43H,2EH,4CH,54H,44H,
DB      2AH,44H,4FH,54H,2AH,4DH,41H,54H,
DB      52H,49H,58H,2AH,4CH,43H,44H,2AH,
DB      4BH,65H,5AH,6FH,6EH,48H,75H,69H,
DB      2AH,2AH,2AH,2AH,2AH,2AH,2AH,2AH,
DB      44H,4FH,54H,20H,4DH,41H,54H,52H,
DB      49H,58H,20H,4CH,49H,51H,55H,49H,
DB      44H,20H,43H,52H,59H,53H,54H,41H,
DB      4CH,20H,44H,49H,53H,50H,4CH,41H,
DB      59H,20H,4DH,4FH,55H,44H,4CH,45H,
DB      2AH,2AH,2AH,2AH,2AH,2AH,2AH,2AH,
DB      2AH,2AH,2AH,2AH,2AH,2AH,2AH,2AH,
```

```
  DB        54H,4DH,0B0H,44H,4DH,43H,34H,30H,
  DB        32H,2AH,2AH,2AH,2AH,2AH,2AH,2AH,
  DB        2AH,2AH,2AH,2AH,2AH,2AH,2AH,2AH,
  DB        2AH,2AH,2AH,2AH,2AH,2AH,2AH,2AH,
MAIN :
  MOV       SP, #60H        ;Initial for the first display
  MOV       P1, #38H        ;set function
  LCALL     WINST
  MOV       P1, #0EH        ;set display on/off control
  LCALL     WINST
  MOV       P1, #06H        ;set Entry mode
  LCALL     WINST
  MOV       P1, #01H        ;clear display,write code 20h into all DDRAM
  LCALL     WINST
  LCALL     DELAY1


  MOV       DPTR, #0300H
  MOV       R0, #28H        ;Set Pointer
  MOV       R2, #00H
  MOV       A, #00H
  MOV       P1, #80H        ;set DDRAM address 0000h
  LCALL     WINST
LOOP1:
  MOVC      A, @A+DPTR
  MOV       P1, A
  LCALL     WDATA
  INC       R2
  MOV       A, R2
  DJNZ      R0, LOOP1

  MOV       DPTR, #0328H
  MOV       R0, #28H
  MOV       R2, #00H
```

```
  MOV      A, #00H
  MOV      P1, #0C0H
  LCALL    WINST
LOOP2:
   MOVC     A, @A+DPTR
  MOV      P1, A
  LCALL    WDATA
  INC      R2
  MOV      A, R2
  DJNZ     R0, LOOP2      ;The first display is over
  LCALL    DELAY2             ;paused    about 5ms


  MOV      SP, #60H       ;initial for the second display
  MOV      P1, #38H
  LCALL    WINST
  MOV      P1, #0EH
  LCALL    WINST
  MOV      P1, #06H
  LCALL    WINST
  MOV      P1, #01H
  LCALL    WINST
  LCALL    DELAY1

  MOV      DPTR, #0350H      ;ready for the first line display
  MOV      R0, #28H
  MOV      R2, #00H
  MOV      A, #00H
  MOV      P1, #80H
  LCALL    WINST
LOOP3:
   MOVC     A, @A+DPTR
  MOV      P1, A
  LCALL    WDATA
```

```
  INC      R2
  MOV      A, R2
  DJNZ     R0, LOOP3        ;THE first line display is over

  MOV      DPTR, #0378H     ;ready for the second line display
  MOV      R0, #28H
  MOV      R2, #00H
  MOV      A, #00H
  MOV      P1, #0C0H
  LCALL    WINST
LOOP4:
  MOVC     A, @A+DPTR
  MOV      P1, A
  LCALL    WDATA
  INC      R2
  MOV      A, R2
  DJNZ     R0, LOOP4        ;main program is end upto here
LOOP5:
  LCALL    DELAY2
  AJMP     MAIN

WINST:
  CLR      P3.0             ;write to instruction register
  CLR      P3.2
  SETB     P3.1
  LCALL    DELAY1
  CLR      P3.1
  LCALL    DELAY1
  RET

WDATA:
  CLR      P3.2             ;write to data register
  SETB     P3.0
  SETB     P3.1
```

```
  LCALL    DELAY1
  CLR      P3.1
  LCALL    DELAY1
  RET

DELAY1:
          MOV      50H, #08H        ;delay    1648 us
ADDR1:    PUSH     50H
ADDR2:    PUSH     50H
ADDR3:    PUSH     50H
ADDR4:    DJNZ     50H, ADDR4
          POP      50H
          DJNZ     50H, ADDR3
          POP      50H
          DJNZ     50H, ADDR2
  POP      50H
  DJNZ     50H, ADDR1
  RET

DELAY2:
   MOV      R0, #0CCH
  MOV      R2, #66H
ADDR5:
   LCALL    DELAY1              ;delay ccH X 1648us
  DJNZ     R0, ADDR5
ADDR6:
   LCALL    DELAY1              ;delay 66H X 1648us      total 5.05ms
  DJNZ     R2, ADDR6
  RET

  END
```

3.Inspection Item and Standards

Item	The Standard Of Quality Inspection	Checking Manner	Quality Ratio
Frame	Smooth and even surface,no crack,no scratch,no rusty,and not be wrenched out of shape.the range between convex and concave is:d≤0.35mm,and the frame must be connected to the ground.	Checking With Eyes And Using Vernier Caliper, Multimeter	100%
LCD	The major defects would be reject.no scratch and no dusty on the LCD glass surface.d≤0.15mm n≤2 diameter of bubble:d≤0.5 n≤2 damaged size of polarizer:d≤0.15mm, n≤2.	Check It When Displaying	100%
The Relative Position of LCD and Frame	The sealant mouth of the LCD must be at the same side with the frame's.	Checking With Eyes	100%
The Relative Position of PCB Paneland Frame	The frame installing direction must be correct.the twisted angle of the pin is from 45° to 60° ,the pin is vertical to PCB panel and it must be in the middle position of the installing holes.	Checking With Eyes	100%
Function Test	1. The major defects must be reject. 2. Test flow chart (see attached chart) 3. Background changes evenly and no disorderly displaying phenomenon. 4. Display no shortage.	Check It When Displaying	100%

Note:D～Diameter N～Quantity Unit:mm

Ⅴ. Instruction System and Description of Details

1.Instruction System

Only two SPLC780A OR S6A0069X01-C0CX registers,the Instruction Register (IR) and the Data Register (DR) can be directly controlled by the MPU.Prior to internal operation start,control information is temporarily stored in these registers,to allow interface form SPLC780A OR S6A0069X01-C0CX internal operation to various types of MPUs which operate in different speeds or to allow interface to peripheral control ICS.SPLC780A OR S6A0069X01-C0CX internal operation is determined by signals sent from the MPU.These signals include register selection signal(RS),read/write signals (R/W) and data bus signals (DB0－DB7),and are called instructions,here.Table 1 shows the instructions and their execution time.Details are explained in subsequent sections.

Instructions are of 4 types, those that,

(1) Designate SPLC780A OR S6A0069X01-C0CX functions such as display format,data length,etc.

(2) Give internal RAM addresses.

(3) Perform data transfer with internal RAM.

(4) Others.

In normal use,category (3) instructions are used most frequently.However,automatic incrementing by +1 (or decrementing by –1) of SPLC780A OR S6A0069X01-C0CX internal RAM addresses after each data write lessens the MPU program load.The display shift is especially able to perform concurrently with display data write ,enabling the user to develop systems in minimum time with maximum programming efficiency.For an explanation of the shift function in its relation to display ,.When an instruction is executing during internal operation,no instruction other than the busy flag/address read instruction will be executed.

Because the busy flag is set to “1” while an instruction is being executed,check to make sure it is on “1” before sending an instruction from the MPU.

Note 1

Make sure the SPLC780A OR S6A0069X01-C0CX is not in the busy state (BF=0) before sending the instruction from the MPU to the SPLC780A OR S6A0069X01-C0CX. If the instruction is sent without checking the busy flag the time between first and next instructions is much longer than the instruction time.

See Table 1 for a list of each instruction execution time.

Note 2

After executing instruction of writing data to CG/DD RAM or reading data from CG/

DD RAM,RAM address counter is automatically incremented by 1 (or decremented by 1). In this case, this shift is executed after Busy flag is set to “Low”.T_{ADD} is stipulated the time from the fall edge of busy flag to the end of address counter’s renewal.

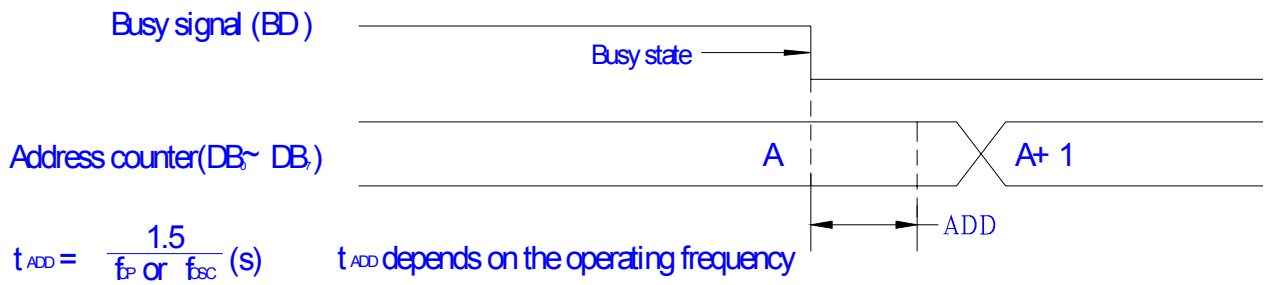

Table 1 Instructions

Instruction	Code										Description	Execution time (when Fose is 250 KHz) Note 1	Execution time (when Fose is 160 KHz) Note 2
	RS	R/W	DB7	DB6	DB5	DB4	DB3	DB2	DB1	DB0			
Clear display	0	0	0	0	0	0	0	0	0	1	Clears all display and returns theCursor to home position (Address 0).	82us~1.64ms	120us~4.9ms
Return home	0	0	0	0	0	0	0	0	1	*	Returns the cursor to the home position (Address 0).Also returns the display being shifted to the original position. DDRAM contents remain unchanged.	40us~1.6ms	120us~4.8ms
Entry mode set	0	0	0	0	0	0	0	1	I/D	S	Sets the cursor move direction and specifies or not to shift the display.These operations are performed during data write and read	40us	120us
Display ON/OFF control	0	0	0	0	0	0	1	D	C	B	Sets ON/OFF of all display (D), cursor ON/OFF (C),and blink of cursor position character (B).	40us	120us
Cursor and display shift	0	0	0	0	0	1	S/C	R/L	*	*	Moves the cursor and shites the display without changing DD RAM contents.	40us	120us
Function set	0	0	0	0	1	DL	N	F	*	*	Sets interface data length (DL) number of display lines (L) and character font (F).	40us	120us
Set CG RAM address	0	0	0	1	A_{CG}						Sets the CG RAM address.CG RAM data is sent and received After this setting .	40us	120us
Set DD RAM address	0	0	1	A_{DD}							Sets the DD address. DD RAM data is sent and received After this setting .	40us	120us
Read busy flag & address	0	1	BF	AC							Reads Busy flag (BF) indicating internal operation is being performed and reads address counter contents.	1us	1us
Write data to CG o r DD RAM	1	0	Write Data								Writes data into DD RAM or CG RAM.	40us	120us
Read data to CG or DD RAM	1	1	Read Data								Reads data from DD RAM or CG RAM	40us	120us
	I/D=1: Increment (+1)I/D=0: Decrement (-1) S =1: Accompanies display shift S/C=1: Display shift S/C=0:Cursor move R/L=0: Shift to right R/L=0: Shift to left DL =1: 8 bits DL =0: 4 bits N =1: 2 lines N =0: 1 lines F =1: 5x10 dots F =0: 5x7 dots BF =1: Internally operating BF =0: Can accept instruction										DD RAM: Display data RAM CG RAM: Character generator RAM A_{CG}: CG RAM address A_{DD}: DD RAM address Corresponds to cursor address AC: Address counter used For both of DD and CG RAM address	Execution time changes when Frequency changes. (Example) When fosc is 270k Hz: 250 40us x 270 = 37us	

* No effect

Notes 1: Applied to models driven by 1/8 duty or 1/11 duty.

2: Applied to models driven by 1/16 duty.

2. Description of details

(1) Clear display

RS R/W DB7 ----------DB0

Code	0	0	0	0	0	0	0	0	0	1

Writes space code “20” (hexadecimal) (character pattern for character code “20” must be blank pattern) into all DD RAM address.Set DD RAM address 0 in address counter.Returns display to its original status if it was shifted. In other words.the display disappears and the cursor or blink go to the left edge of the display (the first if 2 lines are displayer).Set I/D= 1 (Increment Mode) of Entry Mode.S of Entry Mode doesn’t change.

(2) Return home

RS R/W DB7 ----------DB0

Code	0	0	0	0	0	0	0	0	1	*

*No effect

Sets the DD RAM address 0 in address counter. Returns display to its original status if it was shifted. DD RAM contents do not change. The cursor or blink go to the left edge of the display (the first line if 2 lines are displayed).

(3) Entry mode set

RS R/W DB7 ----------DB0

Code	0	0	0	0	0	0	0	1	I/D	S

I/D: Increments (I/D = 1) or decrement s (I/D) the DD RAM address by 1 when a character code is written into or read from the DD RAM .The cursor blink moves to the right when incremented by 1 and to the left when decremented by 1. The same applies to writing and reading of CG RAM.

S: Shifts the entire display either to the right or to the left when **S** is 1; to the left when I/D = 1 and to the right when I/D = 0. Thus it looks as if the cursor stands still and the display moves.The display does not shift when reading from the DD RAM when writing into or reading out from the CG RAM does it shift when S =0.

(4) Display ON/OFF control

RS R/W DB7 ----------DB0

Code	0	0	0	0	0	0	1	D	C	B

D: The display is ON when D = 1 and OFF when D = 0. when off due to D = 0,display Data remains in the DD RAM.It can be displayed immediately by setting D = 1.

C: The cursor displays when C = 1 and does not display when C = 0. Even if the Cursor disappears,the function of I/D,etc.does not change during display data write.

The cursor is displayed using 5 dots in the 8th line when the 5x7 dot character font

Is selected and 5 dots in the 11th line when the 5x10 dot character font is selected.

B: The character indicated by the cursor blink when B = 1.The blink is displayed by Switching between all blank dots and display characters at 409.6 ms interval when fcp or fosc =250Khz. The cursor and the blink can be set to display simultaneously. (The blink frequency changes according to the reciprocal of fcp or fose. 409.6x250/ 270 = 379.2ms when fcp = 270kHz).

(5) Cursor or display shift

	RS	R/W	DB7	----------						DB0
Code	0	0	0	0	0	1	S/c	R/l	*	*

*No effect

Shifts Cursor position or display to the right or left without writing or reading display data.This function is used to correct or search for the display .In a 2-lines display, the cursor moves to the 2nd line when its passes the 40th digit of the 1st line.Notice that the 1st and 2nd line display will shift at the same time.When the displayed data is shifted repeatedly each line only moves horizontally.The 2nd line display does not shift into the 1st line position

S/C	**R/L**	
0	0	Shifts the cursor position to the left.(AC is decremented by one.)
0	1	Shifts the cursor position to the right. (AC is decremented by one.)
1	0	Shifts the entire display to the left. The cursor follows the display shift.
2	1	Shifts the entire display to the right.The cursor follows the display shift.

Address counter (AC) contents do not change if the only action performed is shift

(6) Function set

	RS	R/W	DB7	----------						DB0
Code	0	0	0	0	1	DL	N	F	*	*

*No effect

DL: Sets interface data length.Data is sent or received in 8 bit lengths (DB7~DB0) when DL = 1and in 4 bit lengths (DB7~DB4) when DL = 0.when the 4 bit length is selected

Data must be sent or received twice.

N: Sets number of display lines

F: Sets character font.

(Note) Perform the function at the head of the program before executing all instruction (expect "Busy flag/address read").From this point,the function set instruction cannot be executed unless the interface data length is changed.

N	F	No.of display lines	Character font	Duty factor	Remarks
0	0	1	5x7 dots	1/8	
0	1	1	5x10 dots	1/11	
1	*	2	5x7 dots	1/16	Cannot display 2 lines with 5x10 dot character font.

*No effect

(7) Set CG RAM address

	RS	R/W	DB7	----------						DB0
Code	0	0	0	1	A	A	A	A	A	A

←Higher Order Bits Lower Order Bits→

Sets the CG RAM address into the address counter in binary AAAAAA.Data is then Written or read from the MPU for the CG RAM

(8) Set DD RAM address

	RS	R/W	DB7	----------						DB0
Code	0	0	1	A	A	A	A	A	A	A

←Higher Order Bits Lower Order Bits→

Sets the DD RAM address into the address counter in binary AAAAAAA.Data is then Written or read from the MPU for the DD RAM.

However, When N = 0 (1-line display),AAAAAAA is "00" ~ "4F" (hexadecimal).
When N = 1 (2-line display),AAAAAAA is "00" ~ "27" (hexadecimal) for the first line,and "40" ~ "67" (hexadecimal) for the second line.

(9) Read busy flag & address

	RS	R/W	DB7	----------						DB0
Code	0	1	BF	A	A	A	A	A	A	A

←Higher Order Bits Lower Order Bits→

Reads the busy flag (BF) that indicates the system is now internally operating by a previously received instruction.BF=1 indicates that internal operation is in progress. The next instruction will not be accepted until BF is set to "0".check the BF status before the next write operation.At the same time,the value of the address counter expressed in binary AAAAAAA is read out. The address counter is used by both CG

and DD RAM address ,and its value is determined by the previous instruction. Address contents are the same as in terms (7) and (8).

(10) Write data to CG or DD RAM

	RS	R/W	DB7	----------						DB0
Code	1	0	D	D	D	D	D	D	D	D

←Higher Order Bits Lower Order Bits→

Writes binary 8 bit data DDDDDDDD to the CG or the DD RAM.Whether the CG or DD RAM is to be written into is determined by the previous specification of CG RAM or DD RAM address setting .After write ,the address is automatically incremented or decremented by 1 according to entry mode.The entry mode also determines display shift.

(11) Read data from CG or DD RAM

	RS	R/W	DB7	----------						DB0
Code	1	1	D	D	D	D	D	D	D	D

←Higher Order Bits Lower Order Bits→

Reads binary 8 bits data DDDDDDDD from the CG or DD RAM. The previous designation determines whether the CG or DD RAM is to be read. Before entering the read instruction ,you must execute either the CG RAM or DD RAM address set instruction.If you don't,the first read data will be invalidated. When serially executing the "read" instruction,the next address data is normally read from the second read. The "address set" instruction need not be executed just before the "read" instruction when shifting the cursor by cursor shift instruction (when reading out DD RAM).The cursor shift instruction operation is the same as that of the DD RAM 's address set instruction.

After a read, the entry mode automatically increases or decreases the address by 1. However, display shift is not executed no matter what the entry mode is.

(Note) The address counter (AC) is automatically incremented or decremented by 1 after"write"instructions to either CG RAM or DD RAM. RAM data selected by the AC cannot than be read out even if "read" instructions are executed. The conditions for correct data read out are : execute either the address set instruction or cursor shift instruction (only with DD RAM), just before reading out execute the "read" instruction from the second time the "read" instruction is serial.

3 . Precaution on programming

(1) Instruction of function set

Perform the function at the head of program that accesses SPLC780A OR S6A0069X01-C0CX before executing all instructions,and not change the data of the instruction Register in the program. The data of function register can be changed by the program as follow;

a. • Changing of DL (Data Length)

- when DL is changed from 8-bit length mode.
- when DL is changed from 4-bit length mode.

b. • Changing of N (Column Number)

- Perform the instruction of function set after executing instruction of display clear or display off.

In this case, sequence of AC and DD RAM must be changed.Thus, rewrite the address set register after that.

c. • Changing of F (Font)

- There is no problem in this case, but for dual-line display,the font mode of 5x11 cannot be selected (this mode is forbidden by hardware).

When N of F is changed, power supply voltage for LCD must be changed.If not Changed,crosstalk will appear,or contrast will be poor.

(2) Busy flag check

SPLC780A OR KS0066 is produced in the CMOS process,therefore internal executing time is long.

Standard time is 40us~1.6ms. (This varies by instruction).

When the high speed MPU controls it, check the busy flag before performing Instruction or reading data.

While internal operation is active, Enable signal is not accepted. (Enable signal at Reading status register for checking busy flag is accepted) Busy flag signal is output through DB7, as shown in Table 3, when RS = “0”,R/W = “1 “,and Enable=”1”

(3) Iuput of unidentified instruction code

Undefined instruction code of SPLC780A OR S6A0069X01-C0CX is only as follows;

RS	R/W	DB7~DB
0	0	0~

(Others are included to defined instruction)

When the undefined instruction code is loaded to SPLC780A OR

S6A0069X01-C0CX, it accepts the code,but Does not change the internal states (RAM and other status of Flags). Busy state,

However continues for maximum 40us by the acceptance of the code.

Table 2 The relation between the operation and the combination of RS,R/W

RS	R/W	E	Operation
0	0	↘	Write instruction code
0	1	⟋⟍	Read busy flag and address counter
1	0	↘	Write data
1	1	⟋⟍	Read data

When performing data and instruction code by 4 bit, transfer RS, R/W every time.